Impedance Matching Circuits

(Part 3)

Dr. José Ernesto Rayas-Sánchez

Outline

- Stub matching
- Single-stub matching
- Formulas for single-stub matching
- Examples using the Smith Chart

Stub Matching

- It does not require lumped elements
- It can be used for extremely high frequencies
- It uses segments of transmission lines with the same Z_0 used for the feeding line
- It is very convenient for microstrip and stripline technologies

Single-Stub Matching Networks

- Shunt stub

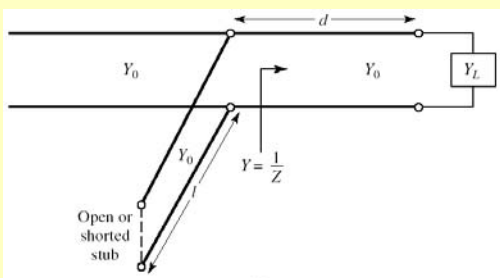

- Series stub

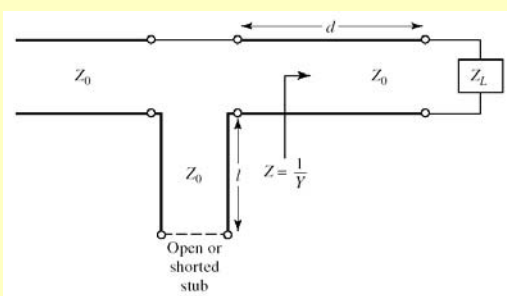

Single-Stub Matching Networks (cont.)

Shunt stub

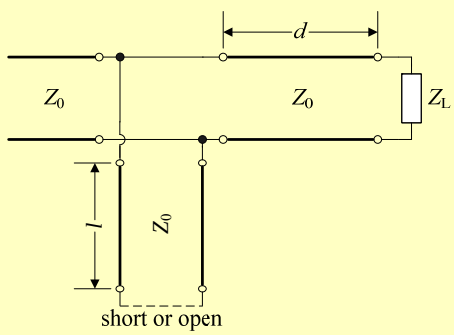

Series stub

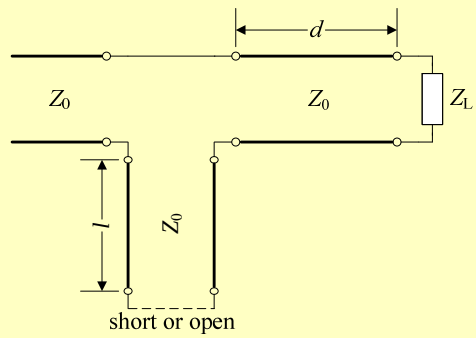

Single-Stub Series Matching

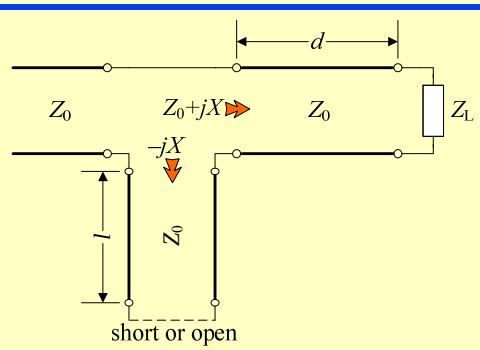

- First transmission line converts Z_L to an impedance $Z_0 + jX$
- Second transmission line converts a short or an open to an impedance $-jX$
- We only need to find d and l

Single-Stub Shunt Matching

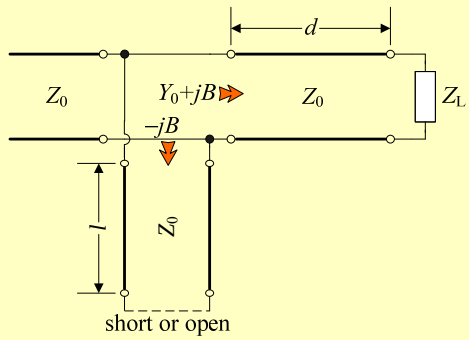

- First transmission line converts Y_L to an admittance $Y_0 + jB$
- Second transmission line converts a short or an open to an admittance $-jB$
- We only need to find d and l

Solving Stub Matching Problems

- Using formulas
- Using the Smith Chart

Single-Stub Series – Formulas ($Y_L = G_L + jB_L$)

$$t = \frac{B_L \pm \sqrt{G_L[(Y_0 - G_L)^2 + B_L^2]/Y_0}}{G_L - Y_0} \quad \text{for } G_L \neq Y_0$$

$$t = \frac{-B_L}{2Y_0} \quad \text{for } G_L = Y_0$$

$$\frac{d}{\lambda} = \begin{cases} \frac{1}{2\pi}\tan^{-1} t & \text{for } t \geq 0 \\ \frac{1}{2\pi}(\pi + \tan^{-1} t) & \text{for } t < 0 \end{cases}$$

$$X = \frac{G_L^2 t - (Y_0 - B_L t)(B_L + Y_0 t)}{Y_0[G_L^2 + (B_L + Y_0 t)^2]}$$

- For an short-circuited stub: $\frac{l_{sc}}{\lambda} = \frac{-1}{2\pi}\tan^{-1}\left(\frac{X}{Z_0}\right)$
- For a open-circuited stub: $\frac{l_{oc}}{\lambda} = \frac{1}{2\pi}\tan^{-1}\left(\frac{Z_0}{X}\right)$

Dr. J. E. Rayas-Sánchez *(D. M. Pozar, Microwave Engineering, Wiley, 2005)* 9

Single-Stub Shunt – Formulas ($Z_L = R_L + jX_L$)

$$t = \frac{X_L \pm \sqrt{R_L[(Z_0 - R_L)^2 + X_L^2]/Z_0}}{R_L - Z_0} \quad \text{for } R_L \neq Z_0$$

$$t = \frac{-X_L}{2Z_0} \quad \text{for } R_L = Z_0$$

$$\frac{d}{\lambda} = \begin{cases} \frac{1}{2\pi}\tan^{-1} t & \text{for } t \geq 0 \\ \frac{1}{2\pi}(\pi + \tan^{-1} t) & \text{for } t < 0 \end{cases}$$

$$B = \frac{R_L^2 t - (Z_0 - X_L t)(X_L + Z_0 t)}{Z_0[R_L^2 + (X_L + Z_0 t)^2]}$$

- For an open-circuited stub: $\frac{l_{oc}}{\lambda} = \frac{-1}{2\pi}\tan^{-1}\left(\frac{B}{Y_0}\right)$
- For a short-circuited stub: $\frac{l_{sc}}{\lambda} = \frac{1}{2\pi}\tan^{-1}\left(\frac{Y_0}{B}\right)$

Dr. J. E. Rayas-Sánchez *(D. M. Pozar, Microwave Engineering, Wiley, 2005)* 10

Single-Stub Series Matching – Example 1

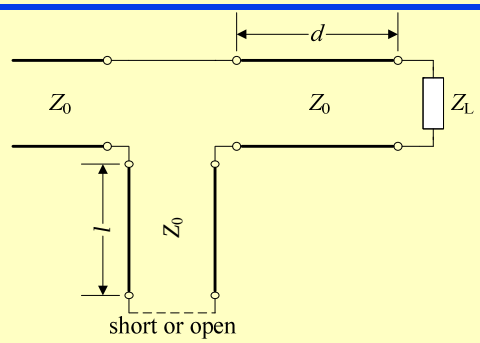

- $Z_L = 100 + j80\ \Omega$ (100Ω resistor in series with a 6.37nH inductor, working a 2 GHz)
- $Z_0 = 50\ \Omega$
- Find two possible solutions for an open single-stub connected in series

Dr. J. E. Rayas-Sánchez 11

Single-Stub Series Matching – Example 1 (cont.)

$$Z_0 = 50\Omega$$
$$Z_L = 100 + j80\ \Omega$$
$$z_L = \frac{Z_L}{Z_0} = 2 + j1.6$$
$$d_1 = 0.328\lambda - 0.208\lambda$$
$$d_1 = 0.120\lambda$$
$$d_2 = (0.5\lambda - 0.208\lambda) + 0.172\lambda = 0.463\lambda$$

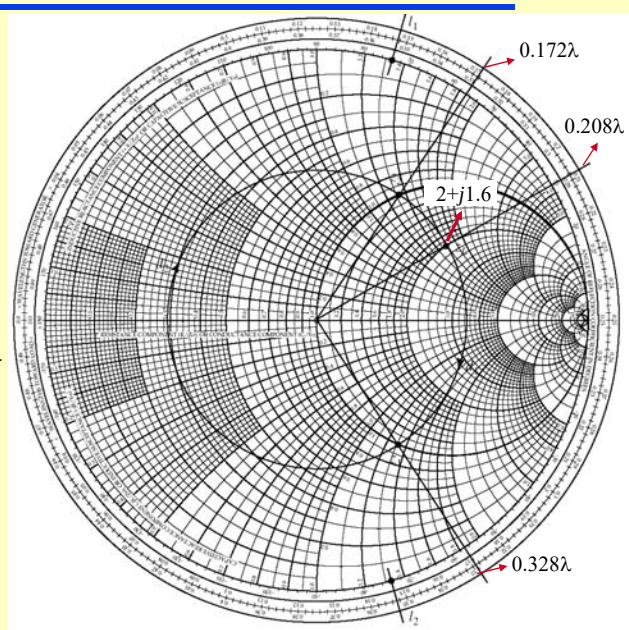

Dr. J. E. Rayas-Sánchez

Single-Stub Series Matching – Example 1 (cont.)

$$z_L = 2 + j1.6$$
$$d_1 = 0.120\lambda$$
$$d_2 = 0.463\lambda$$

$$l_1 = 0.147\lambda + 0.25\lambda$$
$$l_1 = 0.397\lambda$$

$$l_2 = 0.353\lambda - 0.25\lambda$$
$$l_2 = 0.103\lambda$$

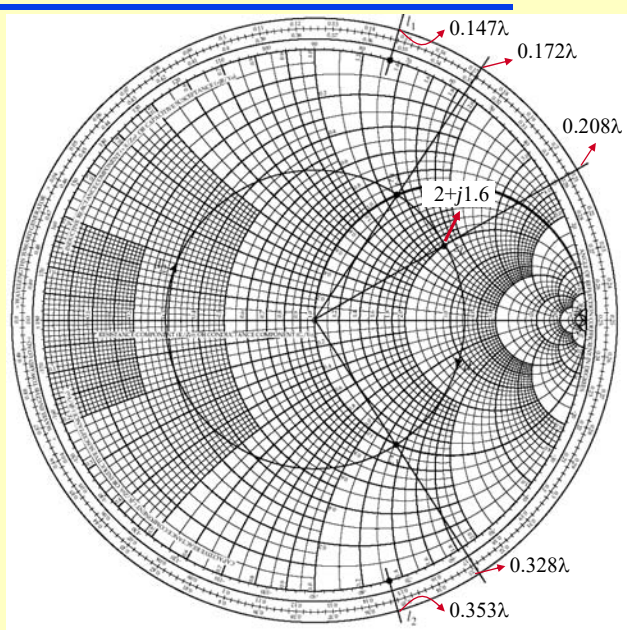

Single-Stub Series Matching – Example 1 (cont.)

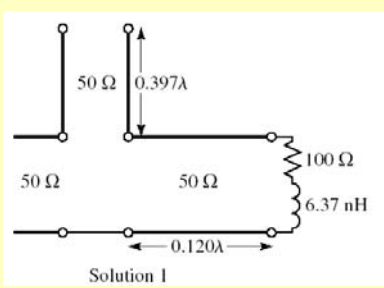

Solution 1

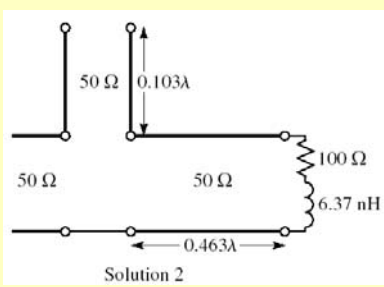

Solution 2

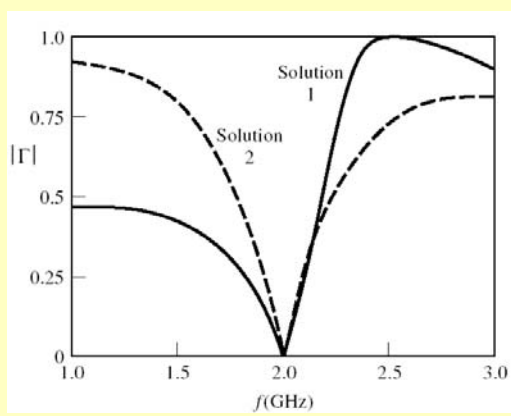

(D. M. Pozar, Microwave Engineering, Wiley, 2005)

Single-Stub Shunt Matching – Example 2

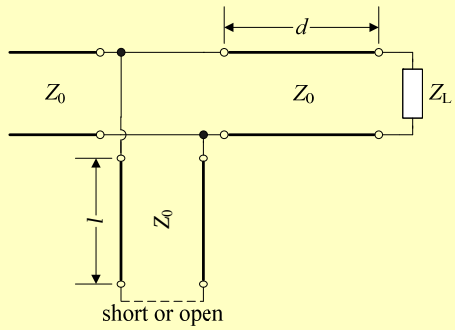

- $Z_L = 60 - j80\ \Omega$ (60Ω resistor in series with a 0.995pF capacitor, working a 2 GHz)
- $Z_0 = 50\ \Omega$
- Find two possible solutions for a short-circuited single-stub connected in parallel

Dr. J. E. Rayas-Sánchez 15

Single-Stub Shunt Matching – Example 2 (cont.)

$$Z_0 = 50\Omega$$
$$Z_L = 60 - j80\ \ \Omega$$
$$z_L = \frac{Z_L}{Z_0} = 1.2 - j1.6$$
$$d_1 = 0.176\lambda - 0.066\lambda$$
$$d_1 = 0.110\lambda$$

$$d_2 = 0.326\lambda - 0.066\lambda$$
$$d_2 = 0.260\lambda$$

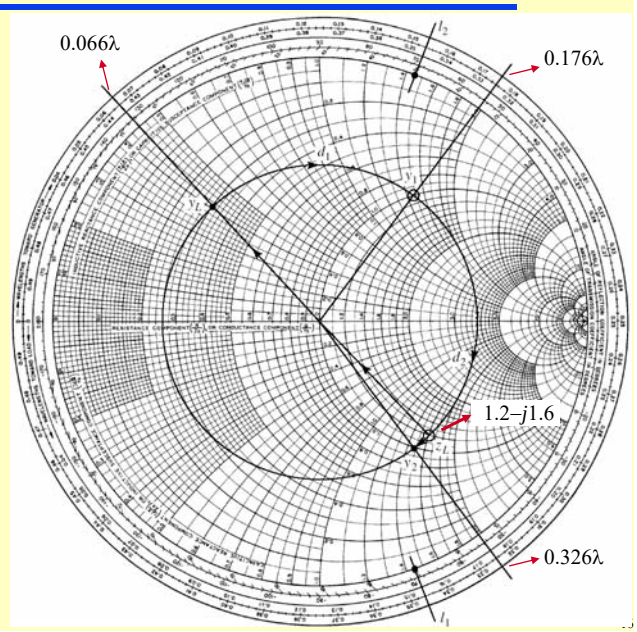

Dr. J. E. Rayas-Sánchez

Single-Stub Shunt Matching – Example 2 (cont.)

$$z_L = 1.2 - j1.6$$
$$d_1 = 0.110\lambda$$
$$d_2 = 0.260\lambda$$
$$l_1 = 0.345\lambda - 0.25\lambda$$
$$l_1 = 0.095\lambda$$
$$l_2 = 0.155\lambda + 0.25\lambda$$
$$l_2 = 0.405\lambda$$

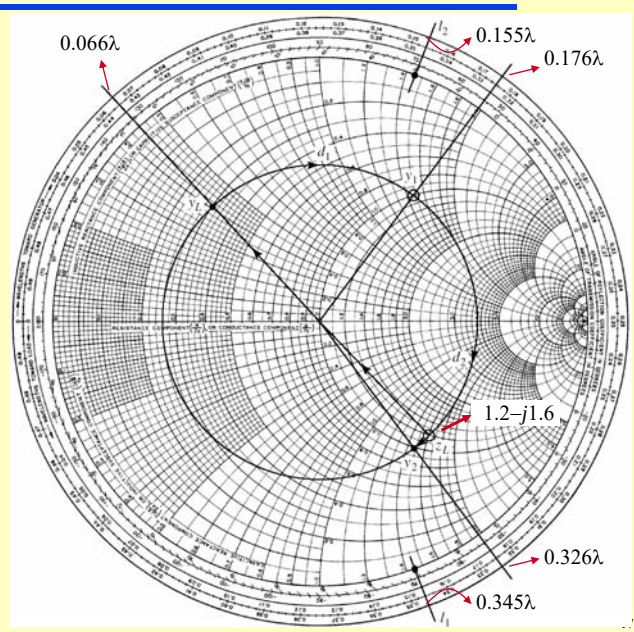

Single-Stub Shunt Matching – Example 2 (cont.)

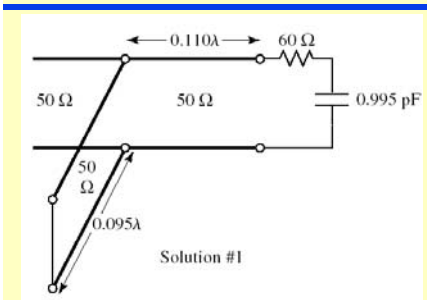

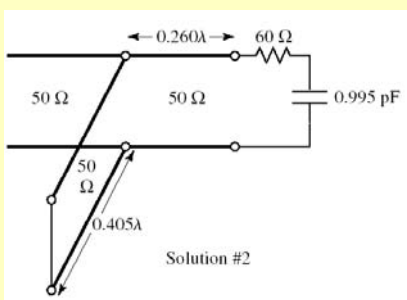

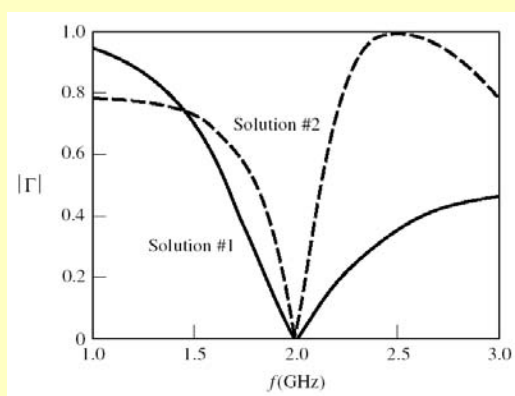

(D. M. Pozar, Microwave Engineering, Wiley, 2005)

Single-Stub Shunt Matching – Example 3

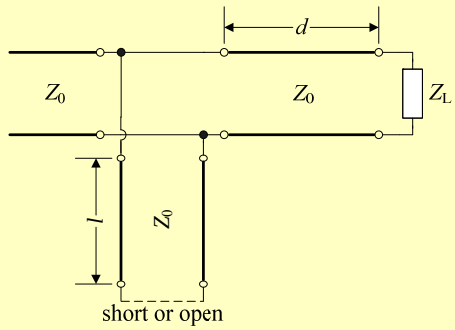

- $Z_L = 200 + j160\ \Omega$
- $Z_0 = 100\ \Omega$
- Find the shortest distance d for a shunt single-stub
- Find the corresponding lengths l for a short and open stub

Single-Stub Shunt Matching – Example 4

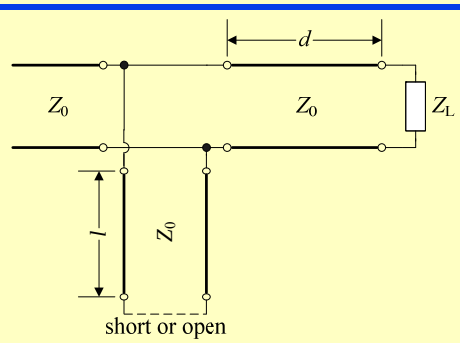

- Z_L is the parallel combination of a 120-Ω resistor and a 2-pF capacitor, working a 4 GHz
- $Z_0 = 50\ \Omega$
- Find the shortest distance d for a shunt single-stub
- Find the corresponding length l for the shunt open stub

Single-Stub Shunt Matching – Example 4 (cont.)

Solution for open-circuited stub

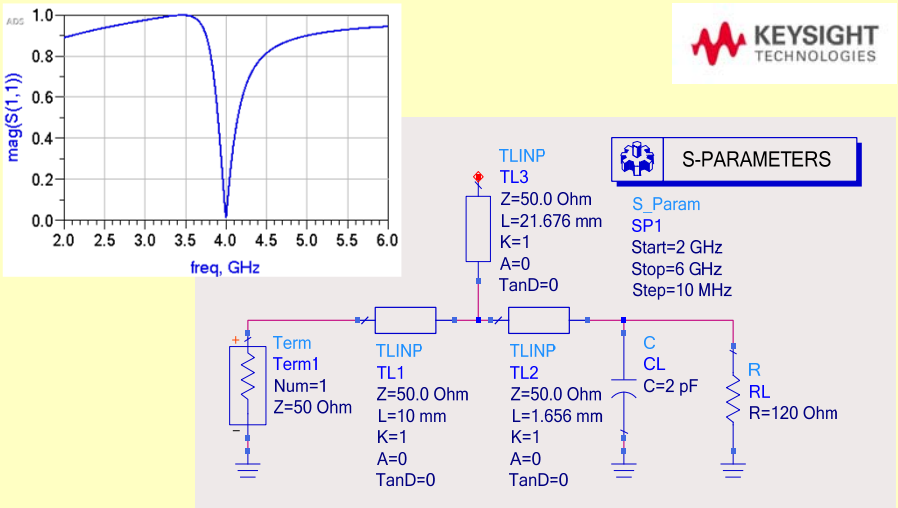

Single-Stub Shunt Matching – Example 4 (cont.)
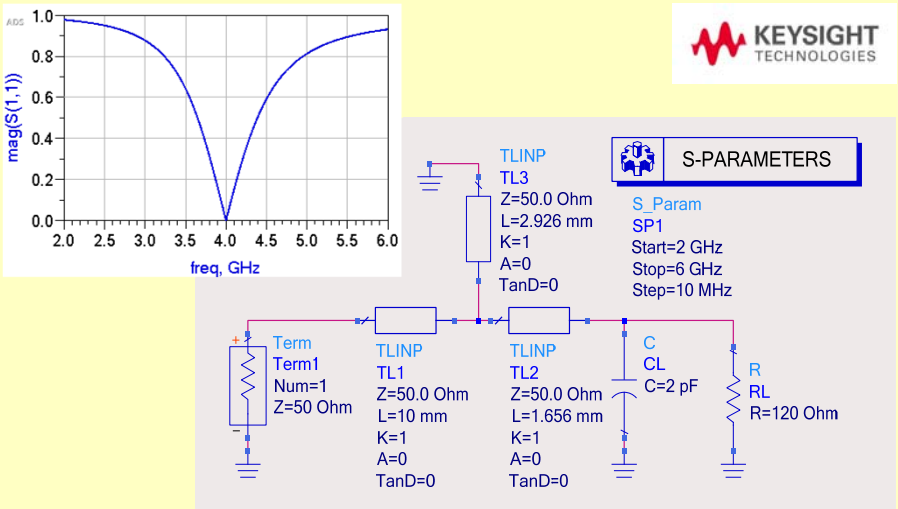
Solution for short-circuited stub