Dr. J. E. Rayas-Sánchez

S-PARAMETERS OF A LUMPED BAND-REJECT FILTER

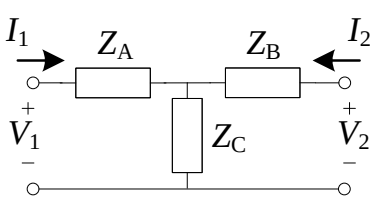

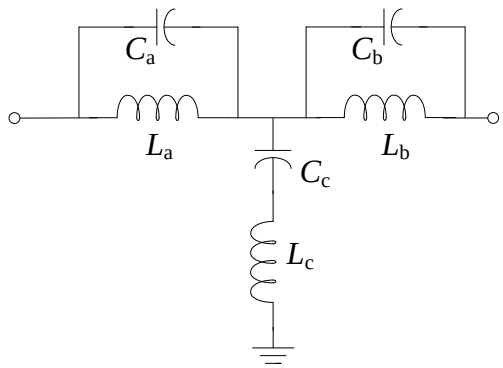

L_a = 1nH
L_b = 1nH
L_c = 1nH
C_a = 1pF
C_b = 1pF
C_c = 1pF

```
%                    Band Reject T Filter (6th Order)
% This function calculates S11 and S21 for a 6th-order band-reject lumped
% T filter. A reference impedance of 50 ohms is used. It returns the
% complex vectors S11 and S21, and the vector of frequencies where the
% S-parameters are evaluated.
% Usage: [S11,S21,f] = t_BRF6(X)
%        X = [La Ca Lb Cb Lc Cc]
%        f: vector of frequencies evaluated (internally defined).

function [S11,S21,f] = t_BRF6(X)

Zo = 50;  % Reference impedance for the S parameters.

IF = 100;     % Initial frequency (Hz).
FF = 10e9;    % Final frequency (Hz).
FP = 300;     % Number of frequency points.
f = linspace(IF,FF,FP); % Frequency sweep.
w = 2*pi*f;   % Angular frequency (rad/s).
s = 1j*w;

La = X(1);
Ca = X(2);
Lb = X(3);
Cb = X(4);
Lc = X(5);
Cc = X(6);

ZLa = s*La;
ZLb = s*Lb;
ZLc = s*Lc;
ZCa = 1./(s*Ca);
ZCb = 1./(s*Cb);
ZCc = 1./(s*Cc);

ZA = ZLa.*ZCa./(ZLa+ZCa);
ZB = ZLb.*ZCb./(ZLb+ZCb);
ZC = ZLc+ZCc;

ZCB = ZC.*(ZB+Zo)./(ZC+ZB+Zo);
ZCA = ZC.*(ZA+Zo)./(ZC+ZA+Zo);
Zi1 = ZA + ZCB;
Zi2 = ZB + ZCA;

S11 = (Zi1-Zo)./(Zi1+Zo);
S22 = (Zi2-Zo)./(Zi2+Zo);

S21 = (1+S11).*Zo.*ZCB./(Zi1.*(Zo+ZB));
S12 = (1+S22).*Zo.*ZCA./(Zi2.*(Zo+ZA)); % (S12 = S21).
```

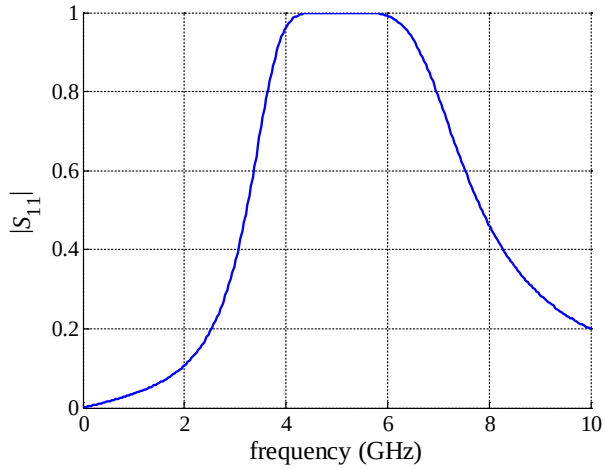
1
0.8
0.6
0.4
0.2
0
$|S_{11}|$
0
2
4
6
8
10
frequency (GHz)

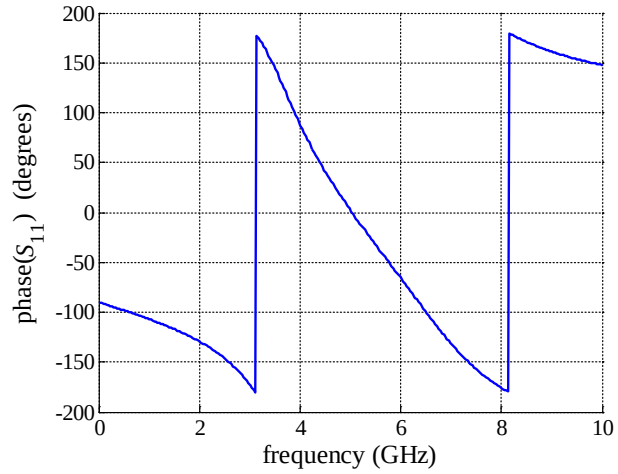
200
150
100
50
0
-50
-100
-150
-200
phase(S_{11}) (degrees)
0
2
4
6
8
10
frequency (GHz)

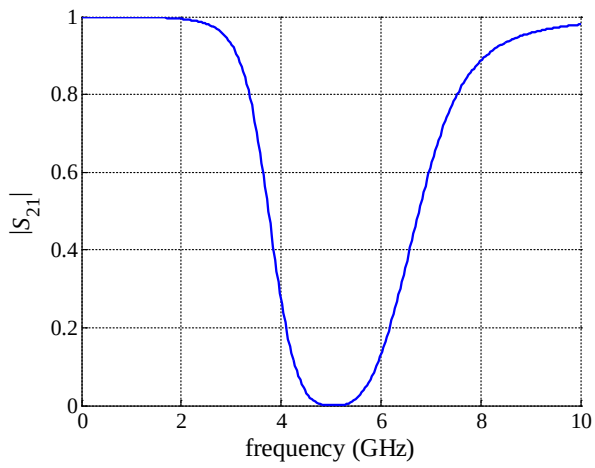
1
0.8
0.6
0.4
0.2
0
$|S_{21}|$
0
2
4
6
8
10
frequency (GHz)

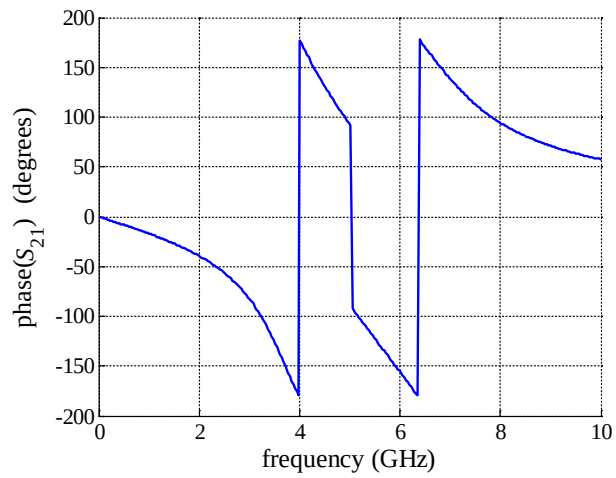
200
150
100
50
0
-50
-100
-150
-200
phase(S_{21}) (degrees)
0
2
4
6
8
10
frequency (GHz)